# Volkswagen

Fitting temperature
18°C - 30°C

Part no: RBP 850
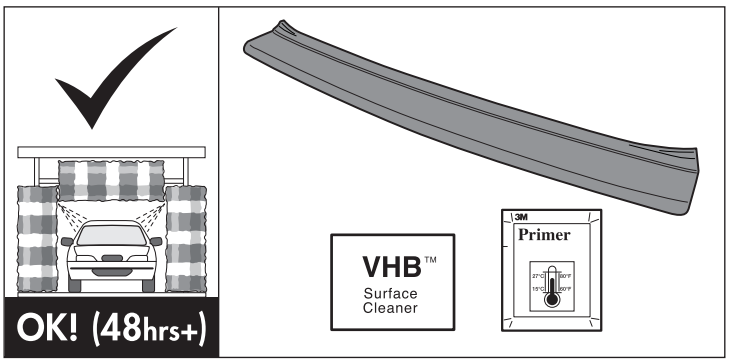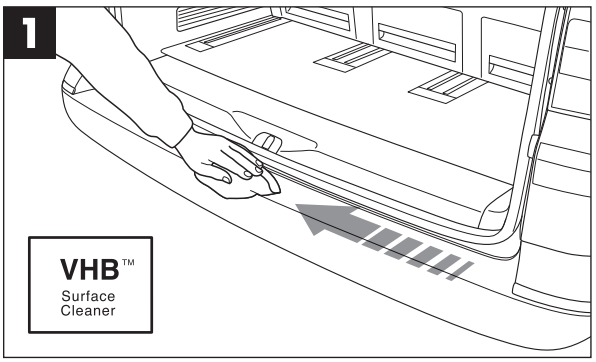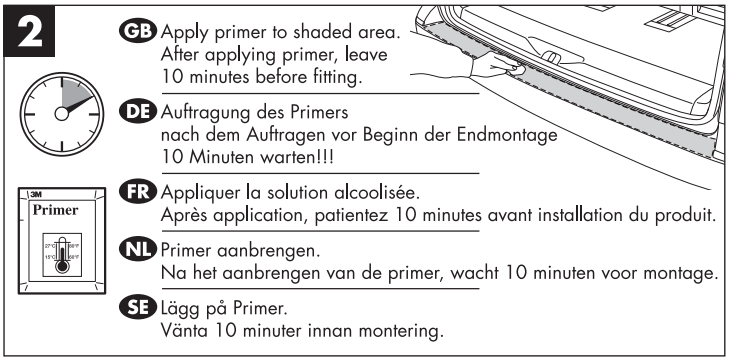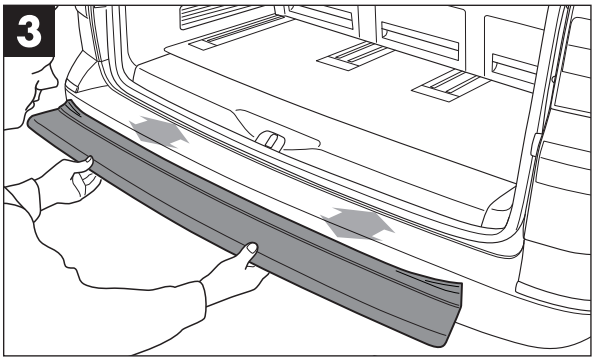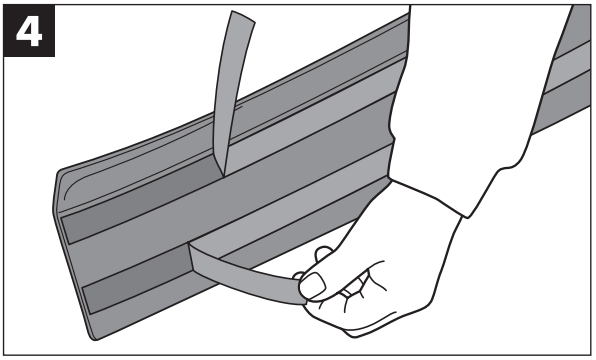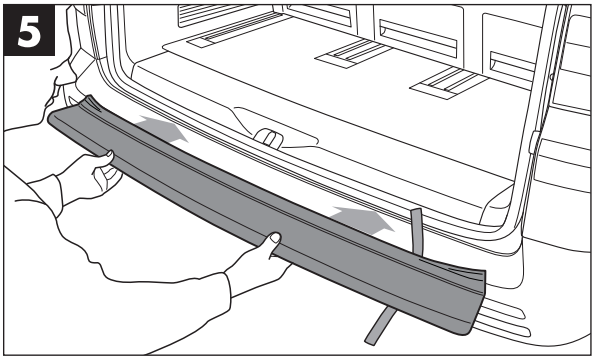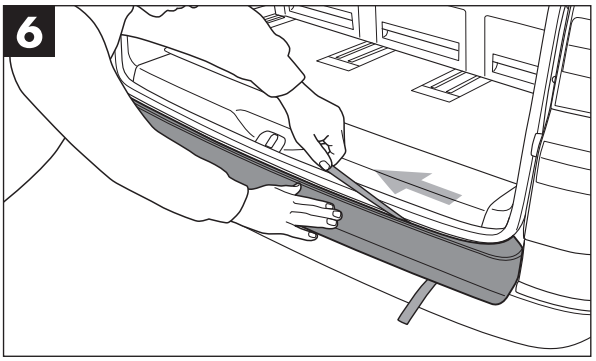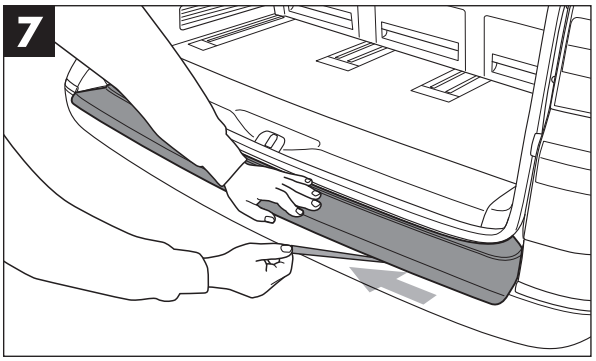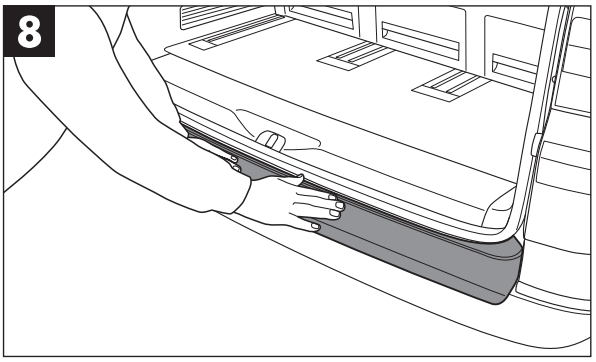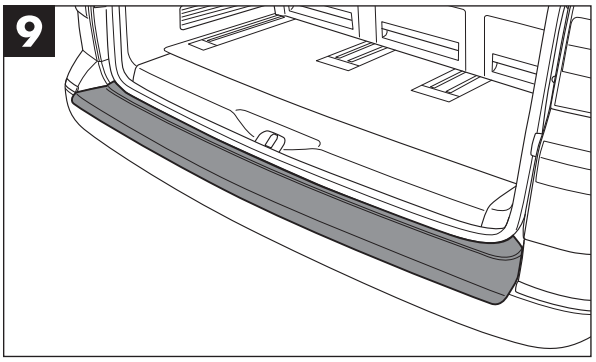
## T6 Caravelle/Combi/Multivan/Transporter 9.2015 >