Revotec

(280mm) Slimline **11”**

12V DC	11” (280mm) Suction			11” (280mm) Blowing		
Revotec part no	**FAN0089**			**FAN0110**		
Full COMEX code	F07P-12E8004-02S 2700.0089.00			F07P-12E8004-02B 2700.0110.00		
Fan shroud type	F07P			F07P		
Static pressure	**Suction**			**Blowing**		
Pa	Inches H_2O	Airflow m^3/h	Airflow cfm	Current A	Airflow m^3/h	Airflow cfm	Current A
0	0	**1620**	960	7.9	**1650**	970	7.7
25	0.1	**1440**	850	8.1	**1400**	830	7.8
50	0.2	**1260**	740	8.0	**1190**	700	7.8
75	0.3	**1010**	600	7.8	**930**	550	7.8
100	0.4	**610**	360	7.7	**630**	370	7.9
125	0.5	**380**	220	7.9	**350**	210	7.8
150	0.6	**0**	0	8.1	**0**	0	8.2

Test voltage 13.0 V DC

Weight 1.2 kg

Suction/Blowing
(Straight blade)

3D model available email us: sales@revotec.com

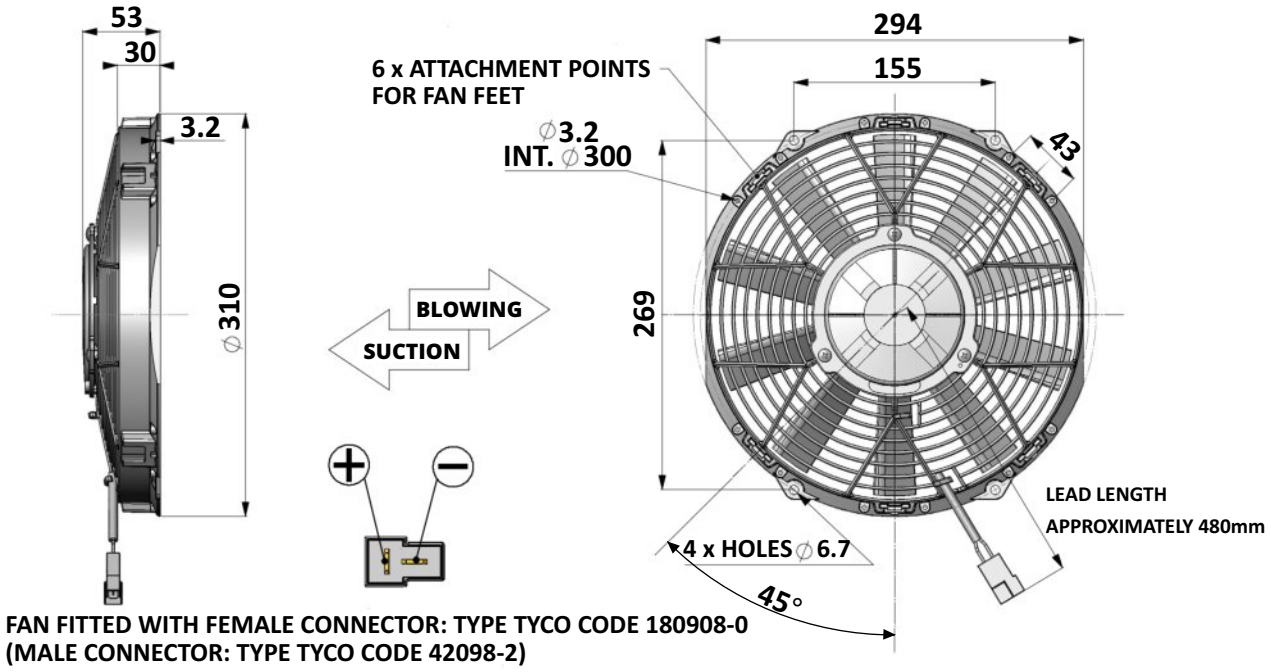

Notes: